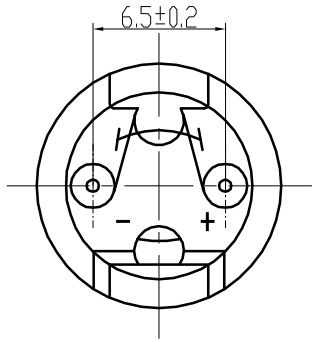

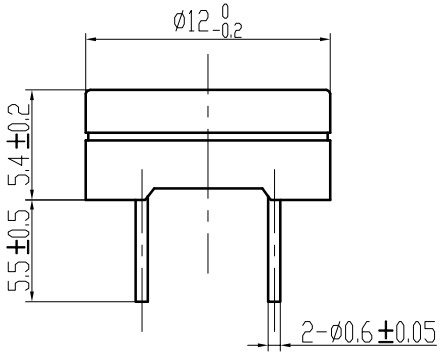

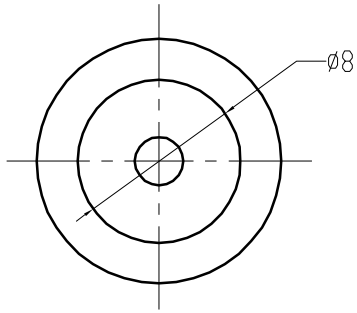

Specificateons

1.Rated Voltage.....1.5V
2.Operating Voltage.....1-2V
3.Max.Rated Current.....30mA
4.Coil Resistance.....42±6 Ω
5.Coil Impedance .....120 Ω
6.Min.Sound Pressure Level.....70dB/10cm
7.Resonant Frequency.....2048Hz
8.Case Material.....MPPO
9.Operating Temperature.....-20～+70℃
10.Store Temperature.....-30～+80℃
11.Weight.....2g

No.	DESCRIPTION	APPROVED	DATE

TOLERANCES UNLESS NOTED OTHERWISE
X ±
XX ±
XXX ±
90° FORMED ±0°
ANGLES ±1°
FIRST ANGLE PROJECTION

APPROVALS	DATE
DRAWN	
CHECKED	
APPROVED	05.08.01

KEPO NINGBO KEPO ELECTRONIC CO.,LTD
http://www.chinaacoustic.com

Magnetic Buzzer
KP12-105B

UNIT	DWG NO.		
mm	KP3.840.710		
SCALE	SHEET	VER.	
NOT TO SCALE		1.0	