ПЕРЕКЛЮЧАТЕЛЬ КНОПОЧНЫЙ СЕРИИ PBS-24B-2

OFF-(ON)

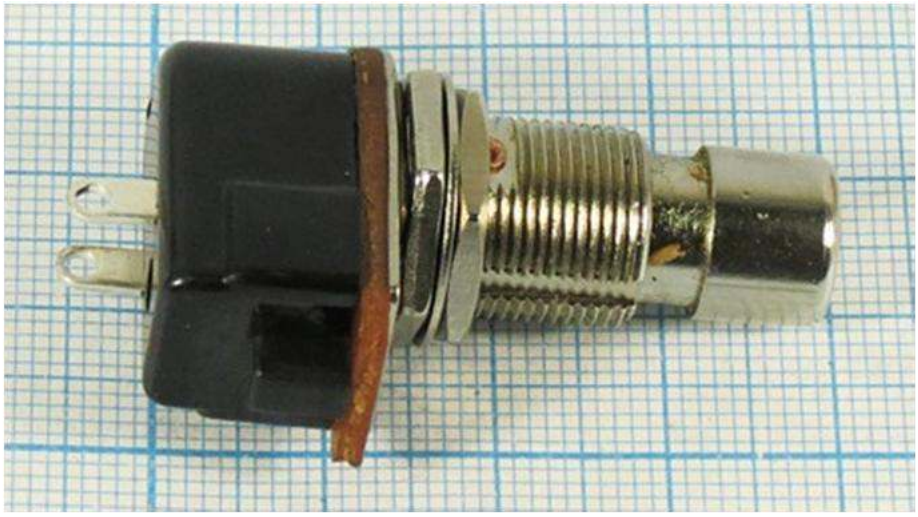

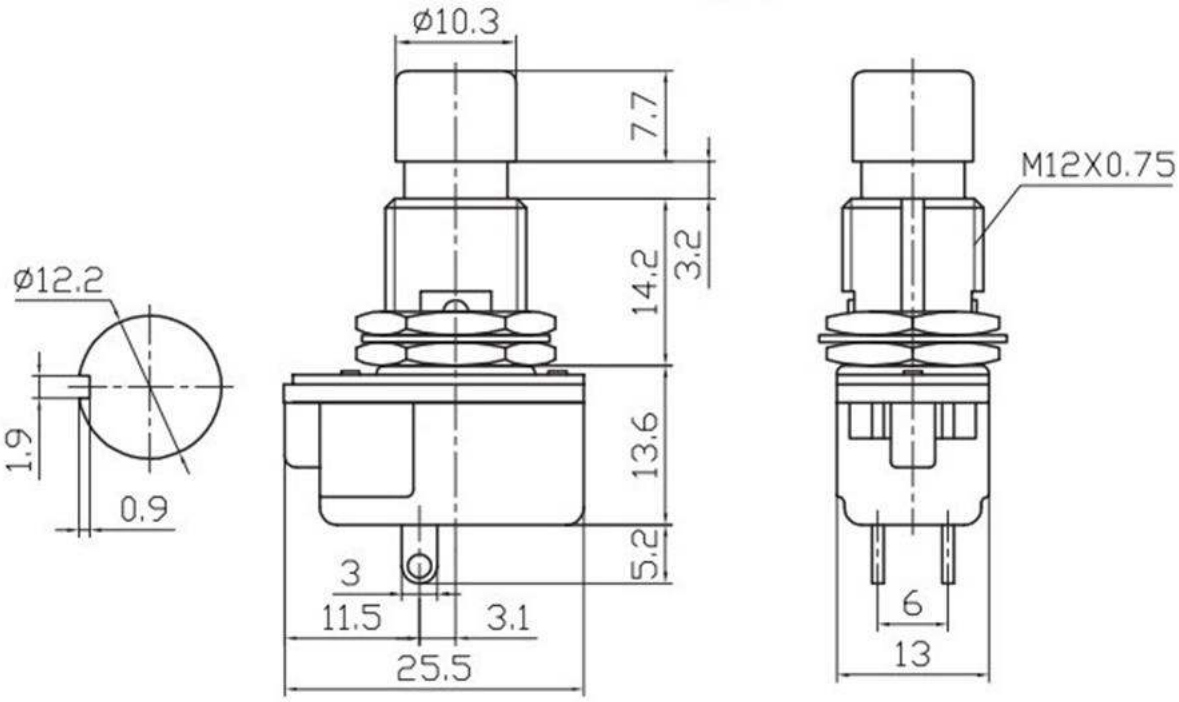

Ordering Information

PBS-10B-2

- 2 — Improved type 2
- B — Circuitry trait
- 10 — Product order
- PBS — Push-button switch

Specification

1. Rating: 10A 125VAC;6A 250VAC
2. Contact Resistance:20mΩ max
3. Insulation Resistance:500VDC 100MΩ min
4. Dielectric Strength:1000VAC, 1Minute
5. Operating Temperature:-25℃ ~ +85℃
6. Electrical Life:50,000 Cycles

Circuitry trait

A	ON - OFF	Push on/Push off	With lock
B	(ON) - OFF	Push on	Momentary(Open type)
C	ON - (OFF)	Push off	Momentary(Close type)
( ): Indicates Momentary			