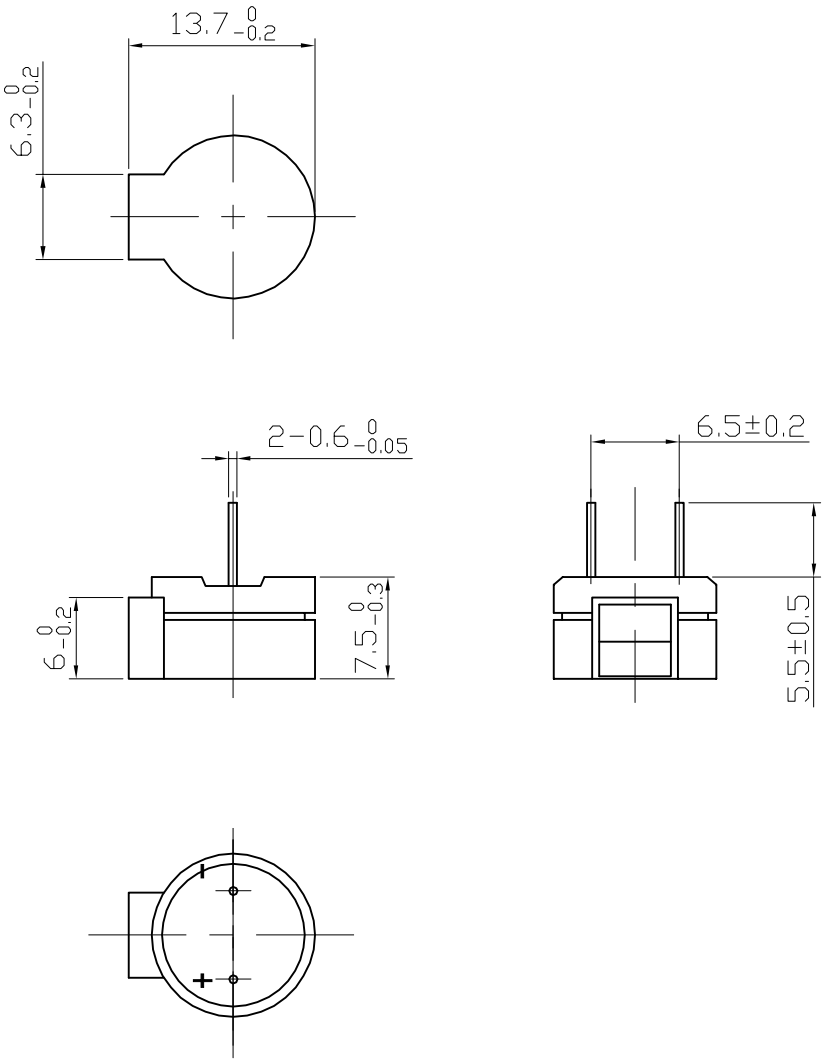

SPECIFICATION

1.Rated Voltage ..... 1.5 VDC
2.Operating Voltage ..... 1~2 VDC
3.Max.Rated Current 70mA/9VDC
4.Min.Sound Pressure Level 85dB/10cm
5.Resonant Frequency 2731Hz
6.Coil Resiance ..... 6.5±1 Ω
7.Coil Impedance .....22 Ω
8.Case Material .....MPPO
9.Operating Temperature ..... -20～+70℃
10.Store Temperature ..... -30～+80℃
11.Weight 2g

No.	DESCRIPTION	APPROVED	DATE

TOLERANCES UNLESS NOTED OTHERWISE
.X ±
.XX ±
.XXX ±
90° FORMED ANGLES +2° -1°
FIRST ANGLE PROJECTION

APPROVALS	DATE
DRAWN	
CHECKED	
APPROVED	05.04.08

KEPO NINGBO KEPO ELECTRONIC CO.,LTD
http://www.chinaacoustic.com

Magnetic Buzzer
KP12-04B1

UNIT mm | DWG NO. KP3.840.657
SCALE NOT TO SCALE | SHEET | VER 1.1