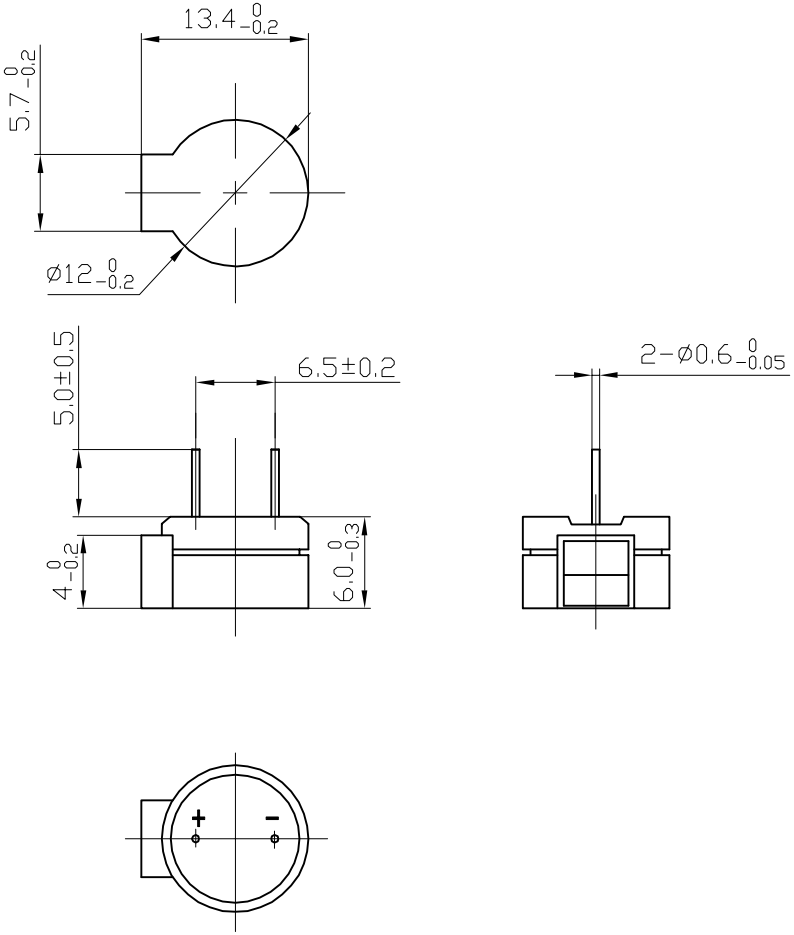

SPECIFICATION

1.Rated Voltage.....1.5V
2.Operating Voltage.....1-2V
3.Max.Rated Current.....70mA
4.Coil Resistance.....5±1 Ω
5.Coil Impedance .....15 Ω
6.Min.Sound Pressure Level.....85dB/10cm
7.Resonant Frequency.....2731Hz
8.Case Material.....MPPO
9.Operating Temperature.....-20～+70℃
10.Store Temperature.....-30～+80℃
11.Weight.....2g

No.	DESCRIPTION	APPROVED	DATE

TOLERANCES UNLESS NOTED OTHERWISE
.X ±
.XX ±
.XXX ±
90° FORMED +2.°
ANGLES -1.°

FIRST ANGLE PROJECTION

APPROVALS	DATE
DRAWN	
CHECKED	
APPROVED	05.08.01

KEPO NINGBO KEPO ELECTRONIC CO.,LTD
http://www.chinaacoustic.com

Magnetic buzzer
KP12-04F2

UNIT mm | DWG NO. KP3.843.656
SCALE NOT TO SCALE | SHEET | VER 1.0