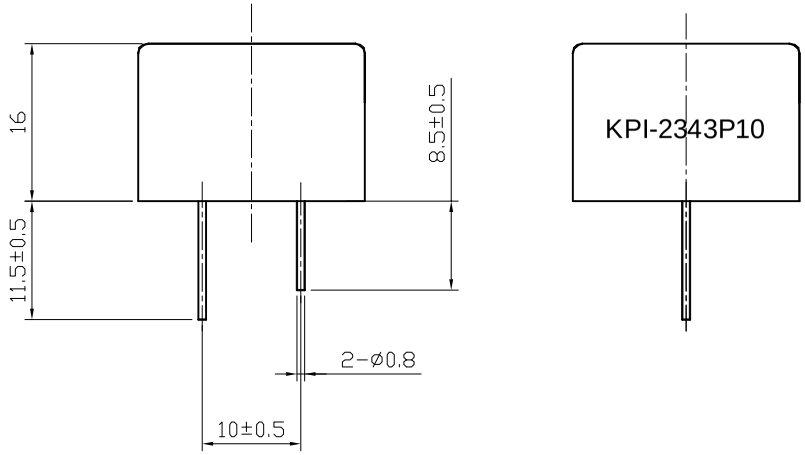

SPECIFICATION

1.Rated Voltage 12VDC
2.Operating Voltage .....8~15VDC
3.Max.Rated Current .....15mA at 12VDC
4.Resonant Frequency .....3.3±0.5KHz
5.Min.Sound Pressure Level.....88dB at 12VDC/30cm
6.Tone Nature .....Continuous
7.Case Material .....ABS
8.Operating Temperature .....-20～+60℃
9.Store Temperature .....-30～+70℃
10.Weight 8g

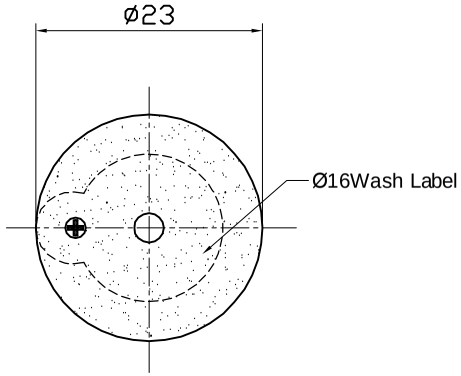

No.	DESCRIPTION	APPROVED	DATE

TOLERANCES UNLESS NOTED OTHERWISE
.X ±
.XX ±
.XXX ±
90° FORMED +2 °
ANGLES -1 °

FIRST ANGLE PROJECTION

APPROVALS	DATE
DRAWN	
CHECKED	
APPROVED	08.07.22

KEPO NINGBO KEPO ELECTRONIC CO.,LTD
http://www.chinaacoustic.com

Piezo Buzzer
KPI-2343P10

UNIT mm | DWG NO. OEM2924
SCALE NOT TO SCALE | SHEET | VER 1.1