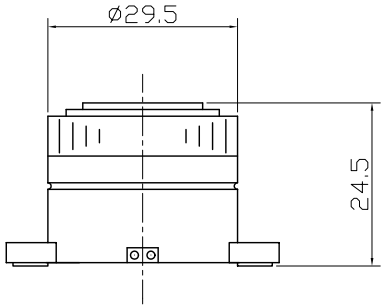


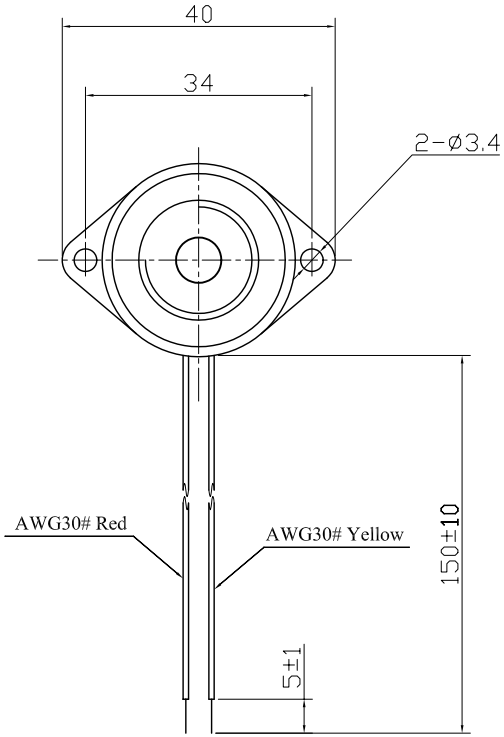


# SPECIFICATION

1.Rated Voltage .....24VDC
2.Operating Voltage .....3~28VDC
3.Max.Rated Current .....10mA at 24VDC
4.Resonant Frequency .....3.7±0.5KHz
5.Min.Sound Pressure Level.....90dB at24VDC/30cm
6.Tone Nature .....Fast Pulse
7.Case Material .....ABS
8.Operating Temperature .....-20 ~ +60℃
9.Store Temperature .....-30 ~ +70℃
10.Weight .....15g

| No. | DESCRIPTION | APPROVED | DATE |
|---|---|---|---|

TOLERANCES UNLESS NOTED OTHERWISE
.X ±
.XX ±
.XXX ±
90° FORMED +2°
ANGLES -1°

FIRST ANGLE PROJECTION

| APPROVALS | DATE |
|---|---|
| DRAWN | |
| CHECKED | |
| APPROVED | 03.03.22 |

KEPO NINGBO KEEP IMPROVING ELECTRONIC CO.,LTD
http://www.chinaacoustic.com

Piezo Buzzer
KPI-2911L-24

| UNIT | DWG NO. | | |
|---|---|---|---|
| mm | KP3.840.103 | | |
| SCALE NOT TO SCALE | SHEET | VER 1.0 | |