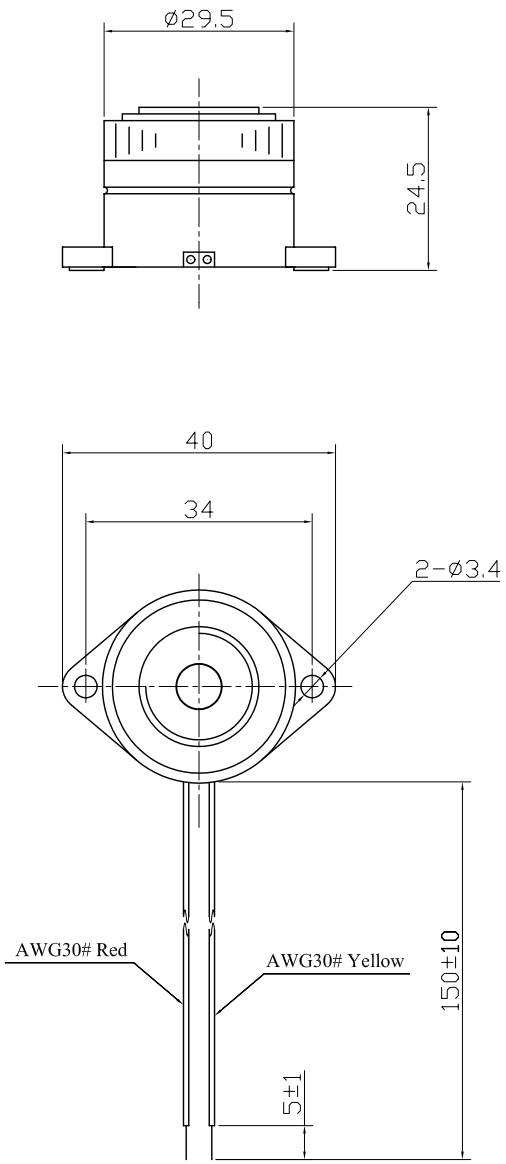

SPECIFICATION

1.Rated Voltage 12VDC
2.Operating Voltage .....3~24VDC
3.Max.Rated Current .....15mA at 12VDC
4.Resonant Frequency .....3.7±0.5KHz
5.Min.Sound Pressure Level.....85dB at12VDC/30cm
6.Tone Nature .....Fast Pulse
7.Case Material .....ABS
8.Operating Temperature .....-20 ~ +60℃
9.Store Temperature .....-30 ~ +70℃
10.Weight 15g

No.	DESCRIPTION	APPROVED	DATE

TOLERANCES UNLESS NOTED OTHERWISE
.X ±
.XX ±
.XXX ±
90° FORMED +2° -1°
ANGLES

FIRST ANGLE PROJECTION

APPROVALS	DATE
DRAWN	
CHECKED	
APPROVED	03.03.22

KEPO NINGBO KEEP IMPROVING ELECTRONIC CO.,LTD
http://www.chinaacoustic.com

Piezo Buzzer
KPI-2911L

UNIT	DWG NO.		
mm	KP3.840.038		
SCALE NOT TO SCALE	SHEET	VER 1.0	