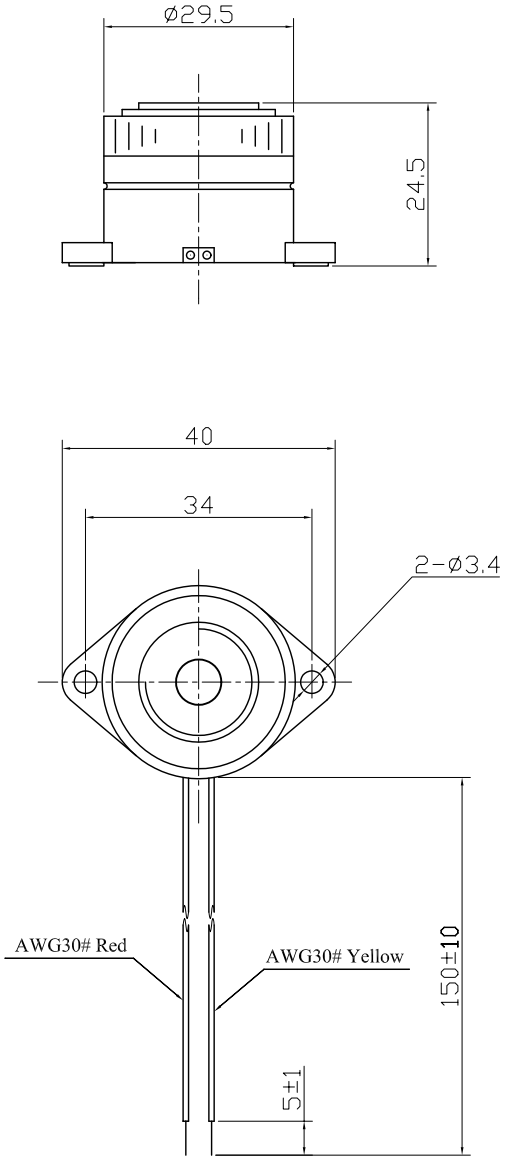

SPECIFICATION

1.Rated Voltage .....12 VDC
2.Operating Voltage .....3~24VDC
3.Max.Rated Current .....15mA at 12VDC
4.Resonant Frequency .....3.7±0.5KHz
5.Min.Sound Pressure Level.....85dB at12VDC/30cm
6.Tone Nature .....Slow Pulse
7.Case Material .....ABS
8.Operating Temperature .....-20 ~ +60℃
9.Store Temperature .....-30 ~ +70℃
10.Weight 15g

No.	DESCRIPTION	APPROVED	DATE

TOLERANCES UNLESS NOTED OTHERWISE
.X ±
.XX ±
.XXX ±
90° FORMED +2°
ANGLES -1°
FIRST ANGLE PROJECTION

APPROVALS	DATE
DRAWN	
CHECKED	
APPROVED	03.04.12

KEPO NINGBO KEEP IMPROVING ELECTRONIC CO.,LTD
http://www.chinaacoustic.com

Piezo Buzzer
KPI-2912L

UNIT mm | DWG NO. KP3.840.078
SCALE NOT TO SCALE | SHEET | VER 1.0