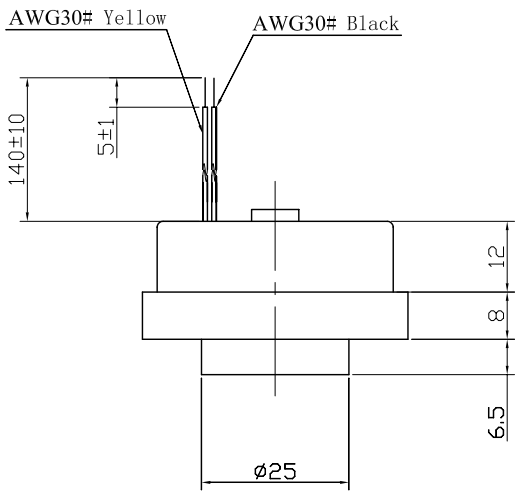

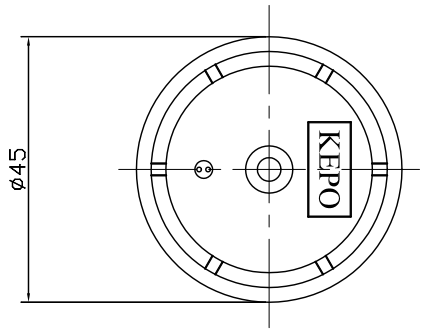

SPECIFICATION

1.Rated Voltage .....12VDC.
2.Operating Voltage .....3~16VDC.
3.Max.Rated Current .....20mA at 12VDC
4.Min.Sound Pressure Level.....92dB at 12VDC/30cm
5.Tone Nature .....Slow Pulse
6.Resonant Frequency .....3.2±0.5KHz.
7.Shell Material/Color.....ABS/White
8.Operating Temperature .....-20～＋60℃.
9.Store Temperature .....-30～＋70℃ .
10.Weight .....21g.

No.	DESCRIPTION	APPROVED	DATE

TOLERANCES UNLESS NOTED OTHERWISE
.X ±
.XX ±
.XXX ±
90° FORMED ANGLES +2° -1°

FIRST ANGLE PROJECTION

APPROVALS	DATE
DRAWN	
CHECKED	
APPROVED	03.03.27

KEPO NINGBO KEEP IMPROVING ELECTRONIC CO.,LTD
http://www.chinaacoustic.com

Piezo Buzzer
KPI-4511L

UNIT mm | DWG NO. KP3.840.039
SCALE NOT TO SCALE | SHEET | VER 1.0