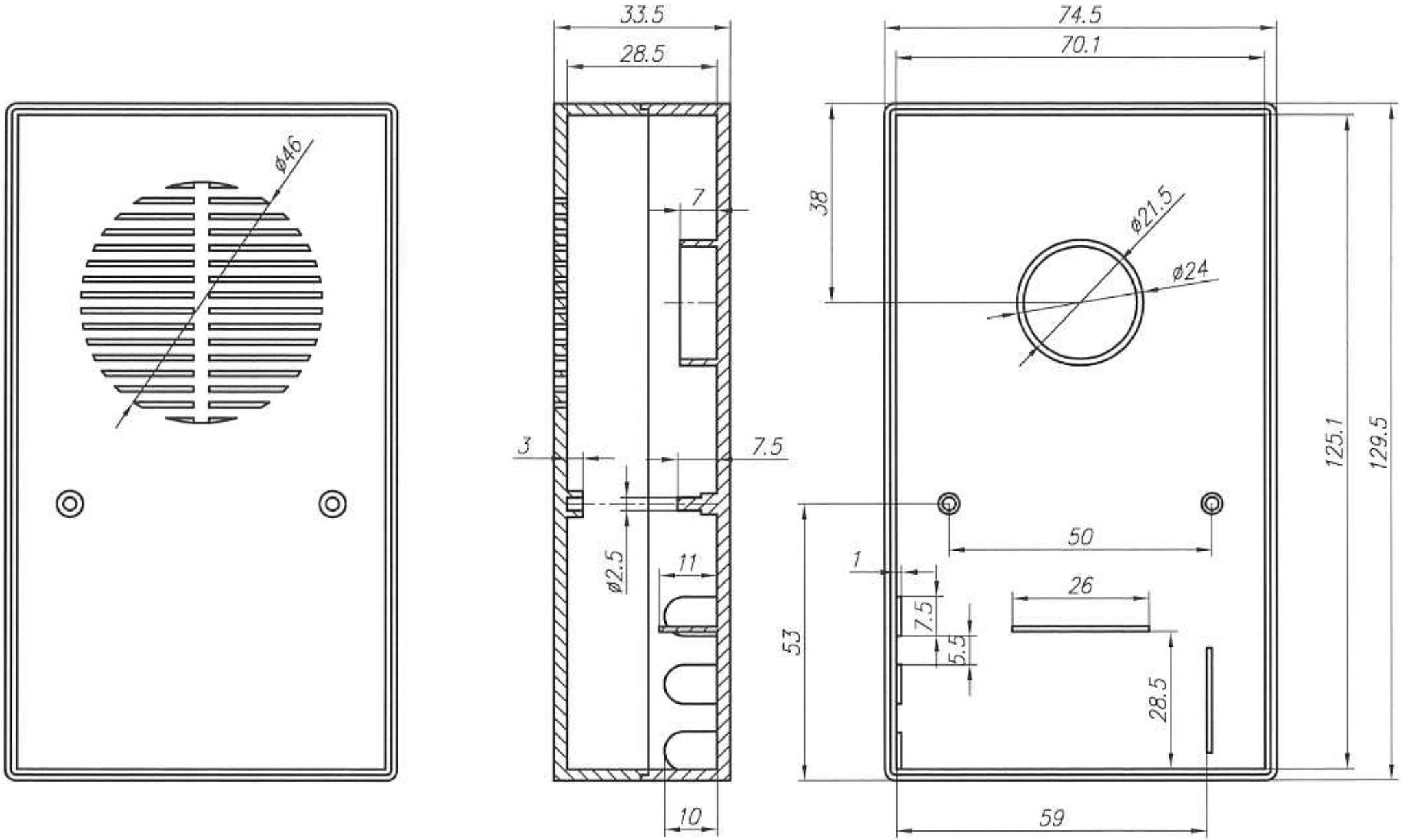
ø46
33.5
28.5
7
3
7.5
ø2.5
11
10
74.5
70.1
38
ø21.5
ø24
125.1
129.5
50
1
26
7.5
5.5
53
28.5
59

КМ–37